VictorTaichung

Management System
ISO 9001:2008
ISO 14001:2004
www.tuv.com
ID 0091003197

VMT-X400

Multi-Tasking Milling & Turning center

- *Turning & Milling in one set-up*
- *Y-axis travel 420 mm*
- *Max. turning dimension Ø720 x 2100 mm*
- *Turning spindle 3000 rpm / 30 kW with 12" chuck*
- *Milling spindle 12000 rpm / 37 kW with HSK-T63 / A63 tooling*
- *ATC-60 tools*

Victor Taichung - an established ISO-9001 & 14001 company

VMT-X400 Multi-Tasking Milling & Turning Center

- *Heavy cutting in entire Y-axis travel 420 mm (16.5")*
- *Max. turning dimension Ø720 x 2100 mm (Ø28.3" x 82.6")*
- *Roller geared B-axis swivel head with curvic coupling enhances clamping rigidity for heavy cutting*
- *Turning spindle 3000 rpm / 12" chuck and milling spindle 12000 rpm / HSK-T63 implement 4+1-axis machining in one set up*

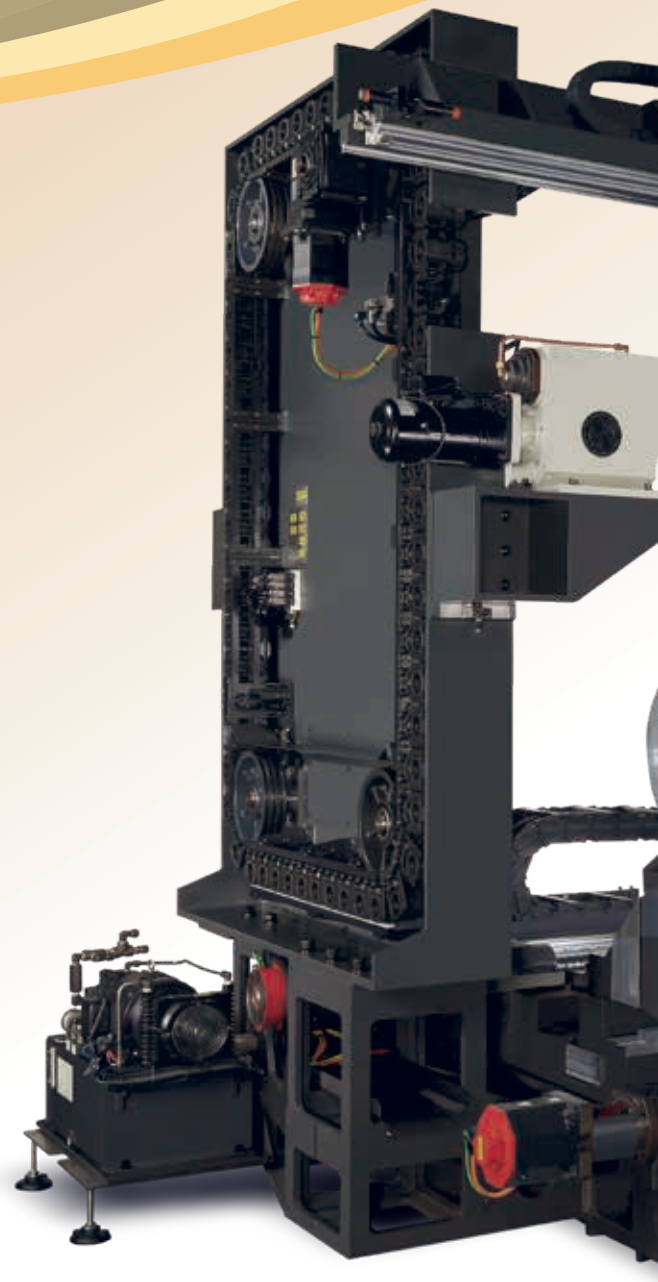

Capacity (X/Y/Z)

Travels
- 840 / 420 / 2100 mm
  33" / 16.5" / 82.6"

Rapid feeds
- 42 / 42 / 42 m/min
  1653 / 1653 / 1653 IPM

ATC-60 tools
- 2.5 (Tool-tool)
  7.5 (Chip-chip)

Roller type guideways
- 55 / 45 / 55 mm
  2.2" / 1.8" / 2.2"

C-axis Turning Spindle

- Built-in spindle
- 12" chuck / 3000 rpm
- 30 kW (40 HP)
- Bar capacity 75 mm (opt. 91, 105 mm)

S1 Continuous operating zone
S2 30min operating zone

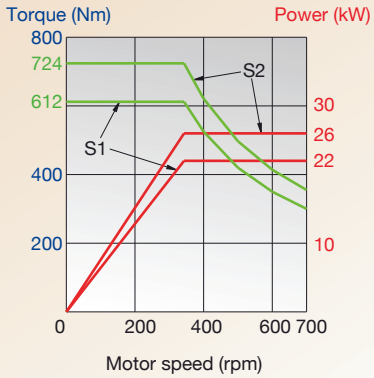

Low winding

S1 Continuous operating zone
S2 30min operating zone

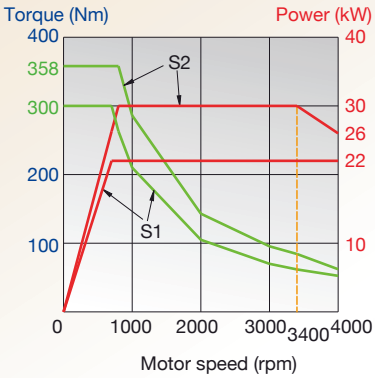

High winding

Fanuc Bil 250S

VICTOR-TAICHUNG

B-axis & Milling Spindle

- Curvic coupling included:
  - 5 degree indexing for B-axis
  - 15 degree indexing for milling spindle (ready for multi-tasking flash tools)
- 12000 rpm HSK-T63 tooling

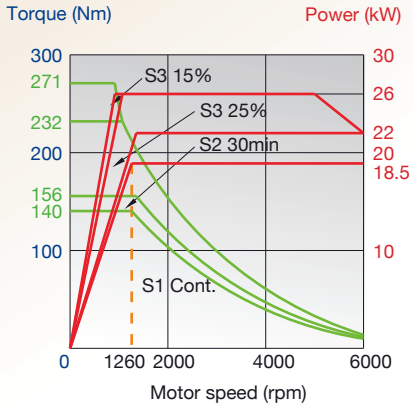

Low winding

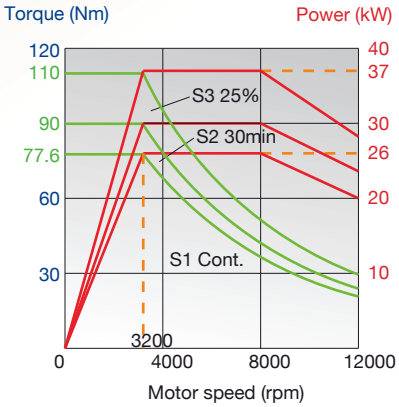

High winding

Fanuc Bil 160S/13000i

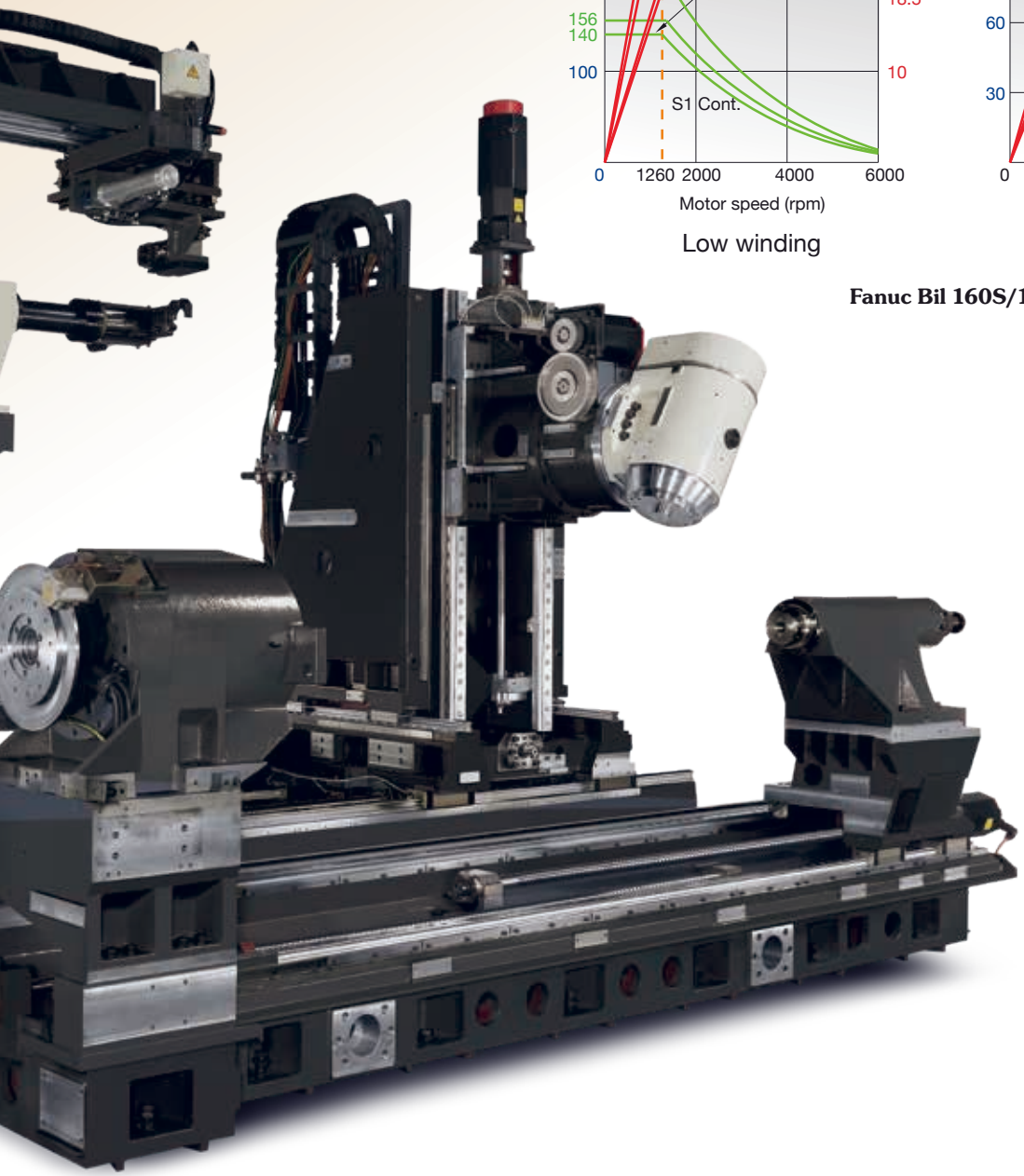

MEEHANITE

Certificated Casting

GM400

GA350

Digital Tailstock

- E-axis servo driven
- MT-5 with built-in bearings
- Available with the 2nd spindle (optional) to offer same output as 1st spindle

Standard accessories

Fanuc 31*i*-B (15") with MGI + AICC-II + HSP (600 blocks)
+ Victor's GUI (VSS) + Fanuc's GUI (Panel *i*H)

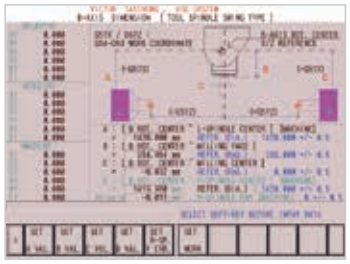

Victor's GUI

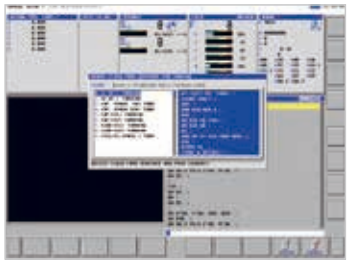

Fixed form programming

CNC manager

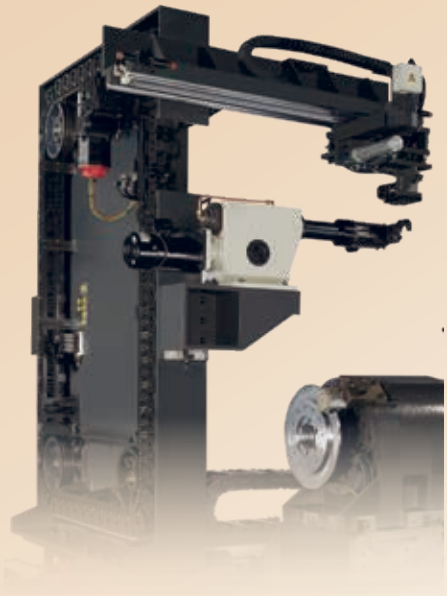

ATC - 60 tools

Chip conveyor

Hydraulic chuck

Optional accessories

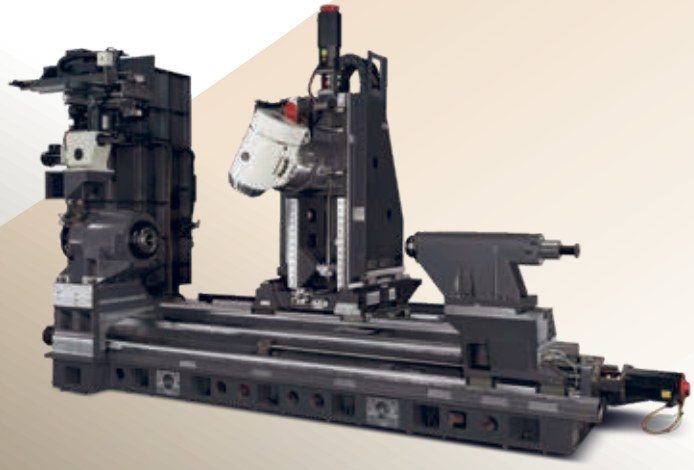

CTS (Coolants Thru. Spindle)

Tool length measurement (ATP)

Right spindle

Hydraulic steady rest

Machine Specification

Items		Unit	VMT-X400
Capacity	Swing over bed	mm	1120
	Between centers	mm	2148
	Max. turning length	mm	2100
	Max. turning diameter	mm	720
Travels	X1-axis (upper tool spindle)	mm	840 (+715/-125)
	Z1-axis (upper tool spindle)	mm	2100
	Y-axis (upper tool spindle only)	mm	420 (±210)
	B-axis	deg	240 (±120)
	E-axis (tailstock/2nd spindle)	mm	1960
Axis feed	X1/Z1/Y/E/(B)-axis feed	m/min	42 / 42 / 42 / 24 / (14 rpm)
	X1/Z1/Y/E/B axis motor power	kW	14 / 14 / 6 / 5 / 4
	Ball screw dia. x pitch	mm	X1:45 x P16, Z1:63 x P25 Y:45 x P16, E:45 x P20
Main spindle (1st spindle)	1st spindle nose (chuck)	inch	A2-8 (12", opt. 10", 15")
	1st spindle speed	rpm	3000
	1st spindle motor power (cont./30 min)	kW	22/30 (high winding)
	Spindle bore	mm	86 (opt. 105)
	Bearing inside diameter	mm	130 (opt. 160)
	Bar capacity	mm	75 (opt. 91, 105)
2nd spindle (optional)	2nd spindle nose (chuck)	inch	A2-8 (12", opt. 10", 15")
	2nd spindle speed	rpm	3000
	2nd spindle motor power (cont./30 min)	kW	22/30
	Spindle bore	mm	86 (opt. 105)
	Bearing inside diameter	mm	130 (opt. 160)
	Bar capacity	mm	75 (opt. 91, 105)
Upper milling spindle (B-axis milling head)	Turret type	rpm	Milling head with ATC
	Positioning indexing resolution:	deg.	5 (by coupling)
	Continuous indexing resolution:	deg.	0.001 (by roller gear)
	Max. speed	rpm	12000
	Milling motor power (cont./30min/25%)	kW	26/30/37 (high winding)
ATC & tool magazine	Tool specification	-	HSK-T63 (opt. Capto C6)
	Tool capacity	-	60
	Tool selection	-	Fixed tool pot number
	Max. tool diameter (w/t adjacent tool)	mm	100 (150)
	Max. tool length	mm	400
	Max. tool weight	kg	7
	Tool exchange time	sec	2.5 (T-T), 7.5 (C-C)
Tailstock	Quill diameter	mm	150
	Quill stroke	mm	150
	Quill taper		MT-5 (live)
Machine	Controller		Fanuc 31i-B (15")
	Tank capacity	L.	750
	Floor requirement (incl. chip conveyor)	mm	7945 x 3316 x 3320
	Power requirement	kVA	110
	Net weight	kg	23500

Standard accessories

- Moving CRT
- Hydraulic chuck with soft jaws
- Chip conveyor
- Higher pressure coolant by Grundfos® pump MTH4-40/4
- Air conditioner for electrical cabinet
- Digital tailstock
- Spindle oil cooler
- Fully enclosed splash guarding
- Hand-wheel (Remote MPG)
- 3 step warning light

Optional accessories

- 2nd spindle (right spindle)
- Automatic Tool Presetter (ATP by Renishaw®) for tool spindle
- KITAGAWA® hydraulic chuck
- Hard jaws
- Coolant Through Spindle (CTS)
- Steady rest
- Bar feeder interface
- Parts catcher (N.A. with lower turret)
- Air blow system
- Auto door
- Fanuc manuals

Tool Shank

HSK-T63

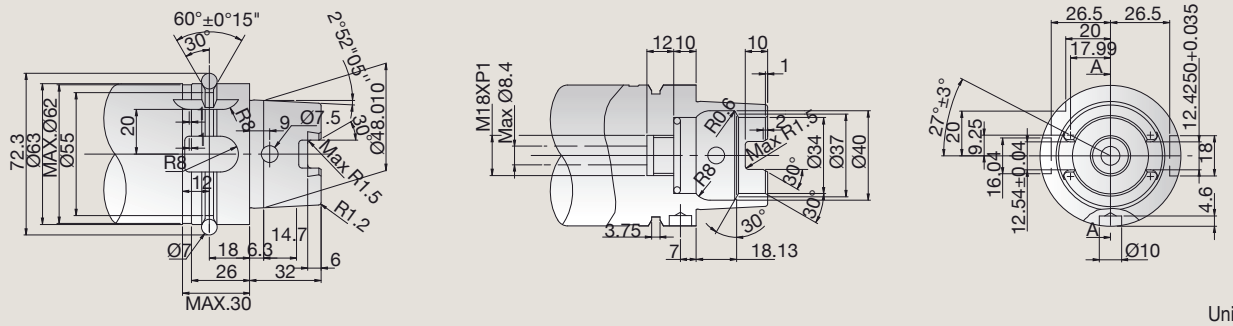

Unit: mm

FANUC 31i-B PANEL *i*H 15" Control SPECIFICATION

VICTOR-TAICHUNG

STANDARD:

ITEM	SPECIFICATION	DESCRIPTION
Control System:		
1	Controlled axes	6 Axes (X, Z, C, Y, B, E)
2	Simultaneous controlled axes	4 Axes
3	Least input increment	0.001mm / 0.001deg.
4	Least command increment	0.0005 (X) / 0.001 (Z, Y, E)mm / 0.001deg. (C, B)
5	Command system	Incremental / Absolute
6	HRV Control	HRV3
7	Unexpected disturbance torque detection (AIR-BAG)	Std.
8	Backlash compensation	Std.
9	Stored pitch error compensation	Std.
Operation & Program Input:		
1	Input / Output interface	RS-232, PCMCIA Card, USB
2	Tool offset	200 sets
3	Sequence number	N8-Digit
4	Program number	O8-Digit
5	Program name	32-characters
6	M code function	M3-digit
7	S code function	S5-digit
8	T code function	T2-digit
9	Positioning	G00
10	Linear interpolation	G01
11	Circular interpolation	G02, G03
12	Helical interpolation	Std.
13	Conical/spiral interpolation	Std.
14	Involute interpolation	G02.2, G03.2
15	Cylindrical interpolation	G7.1
16	Programmable data input	G10
17	Plane selection	G17~G19
18	Inch / Metric conversion	G20/G21
19	Reference position return	G28, G30
20	Thread cutting	G32, G34
21	Circular thread cutting	G35, G36
22	Arbitrary speed threading	Std.
23	Variable lead thread cutting	Std.
24	Circular thread cutting	Std.
25	Threading retract	Std.
26	Tool nose radius compensation	G40~G42
27	Tool offset for Milling and Turning function	G43.7
28	Work piece coordinate system	G52~G59
29	Macro, Sub program call	G65, M98, M99 (10 folds nested)
30	3-D coordinate system conversion	G68
31	Multiple repetitive cycle I & II	G70~G76
32	Canned cycle for drilling	G80~G89
33	Canned cycles	G90, G92, G94
34	Tool offset conversation	G342
35	Program stop / end	M00~M02/M30
36	Rigid tapping (Spindle)	M29
37	Manual Guide i	Std.
38	Victor Smart System, VSS	Std.
Feed Function:		
1	Manual handle feed rate	X1, X10, X100
2	Rapid traverse rate	F0, 25%, 50%, 100%
3	Cutting feed rate	0~150%
4	Spindle override	50~120%
5	Feed er Minute / Revolution	G98 / G99
Edit Operation:		
1	Part Program Storage Length (in total)	5120m / 2MB
2	Number of Registerable programs (in total)	4000
3	Part Program Editing	Std.
FAST package III Function:		
1	Quick program restart	Std.
2	High-speed processing (G5.1 Q1, 600 blocks)	Std.
3	3-D Manual feed	Std.
4	Tilted working plane (TWP) with Guidance	Std.
5	Retraction for 3-D rigid tapping	Std.
6	Workpiece setting error compensation	Std.
7	3-D rotary error compensation	Std.
8	High-speed smooth TCP	Std.
9	3-D cutter compensation	Std.

OPTIONS:

With hardware included:

1	Date server (with PCB and ATA card)	☐
2	Fast Ethernet (100Mbps, available in Data server)	☐
3	CC Link slave	☐
4	PROFIBUS slave	☐

Without hardware included:

5	Part program storage length	(4MB) ☐ (8MB) ☐
6	Look-ahead blocks (G5.1 Q1, 1000 blocks)	☐
7	Built-in 3D interference check (3DCHK)	☐
8	Optional blocks skip 2-9	☐

Machining Range

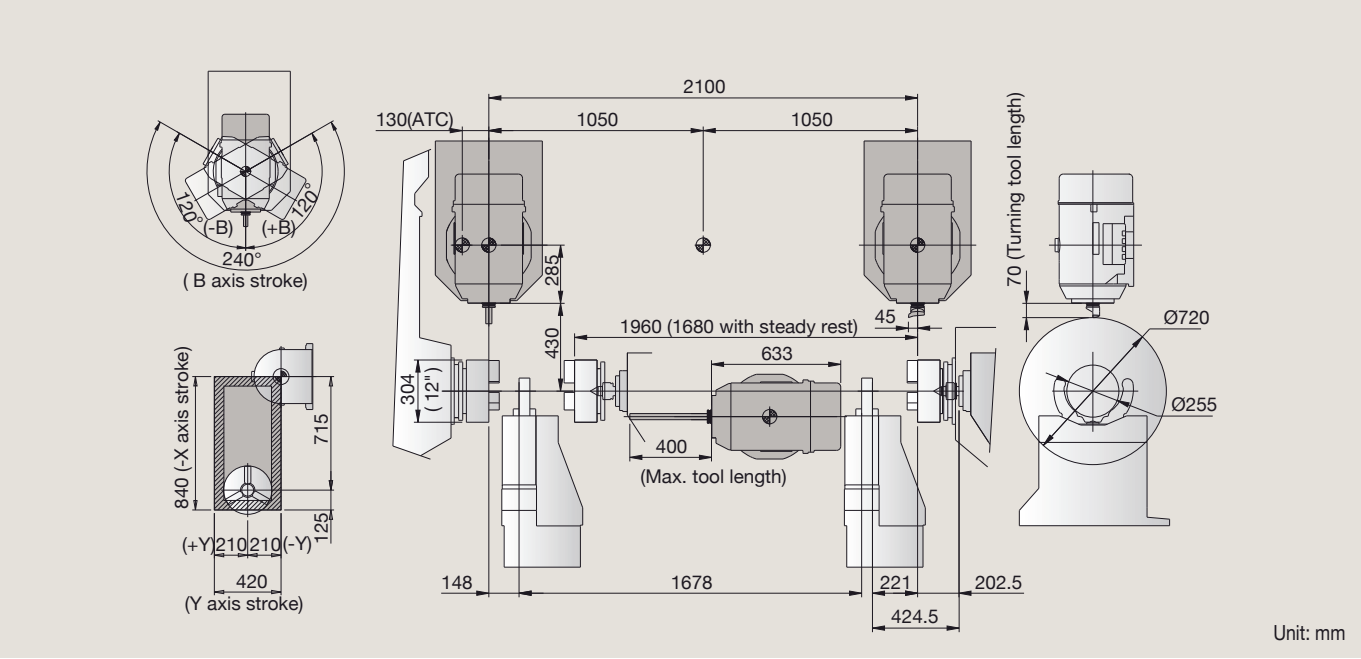

Machine Layout

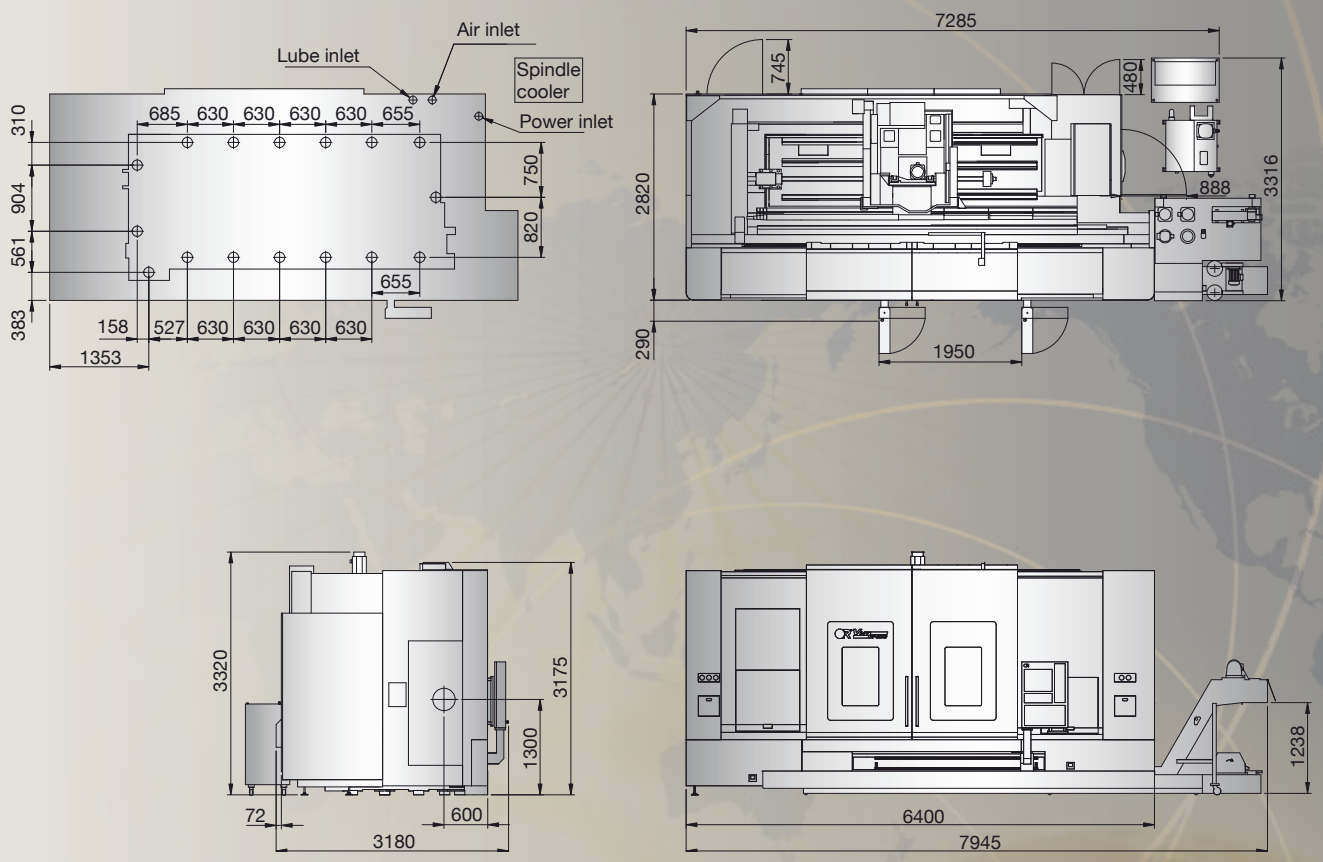

Unit: mm

VictorTaichung profile:
Sales turnover: USD 142 mil's (in 2018)*
No. of employees: 836
*Exchange rate: 1 USD=30 TWD.

HTL VTL VMC HMC **XMT** PIM

THE VICTOR-TAICHUNG COMPANIES

TAIWAN
http://www.or.com.tw
E-mail :info@mail.or.com.tw
☐ Victor Taichung Machinery Works Co., Ltd.
Headquarters:
2088, Sec. 4, Taiwan Blvd.,
Taichung, Taiwan, R.O.C.
TEL : 886-4-23592101
FAX : 886-4-23592943
Overseas Marketing Division:
TEL : 886-4-23580701
FAX : 886-4-23584541

UK
☐ Victor CNC (UK) Ltd.
TEL : 44-1-706-648485
FAX : 44-1-706-648483

FRANCE
☐ Victor France
TEL : 33-1-64772000
FAX : 33-1-64772063

GERMANY
☐ Victor GmbH
TEL : 49-2261-478434
FAX : 49-2261-478327

MALAYSIA
☐ Victor Machinery (M) SDN. BHD.
TEL : 60-3-56337180
FAX : 60-3-56337191

THAILAND
☐ Victor (Thailand) Co. Ltd.
TEL : 66-2-9263735
FAX : 66-2-9032373

INDONESIA
☐ PT. Victor Machinery Indonesia
TEL : +62-21-88958504
FAX : +62-21-88958513

USA
☐ Fortune International Inc.
TEL : 1-732-2140700
FAX : 1-732-2140701

SOUTH AFRICA
☐ Victor Fortune (PTY) Ltd.
TEL : 27-11-3923800
FAX : 27-11-3923899

CHINA
☐ Victor Taichung
Machinery (Shanghai)
TEL : 86-21-59768018
FAX : 86-21-59768009

VictorTaichung was also marketed under the brand names VICTOR (outside North America) and FORTUNE GH1GE19EB

19021201 / a.c.s. TEL: 04-24733326